A TRIPLER TO 220 GHz USING A BACK-TO-BACK BARRIER-N-N+ VARACTOR DIODE

DEBABANI CHOUDHURY, PETER H. SIEGEL, ANTTI V. .RÄISÄNEN*, SUZANNE C. MARTIN AND R.PETER SMITH

Jet Propulsion Laboratory
California Institute of Technology
Pasadena, CA 91109

* Current Address: Helsinki University of Technology
Radio Laboratory
FIN-02150 Espoo, Finland

ABSTRACT

The back-to-back barrier-N-N$^+$ (bbBNN) varactor is a nonlinear device being developed for frequency multiplier applications above 100 GHz. Its symmetrical C-V characteristic, low series resistance and suitability to planarization make it ideal choice for high frequency, low power, odd harmonic generation.

In this paper, the performance of a 220 GHz tripler using integrated planar bbBNN devices is presented. A new split-waveguide block design has been used to provide the proper embedding impedances to the device. The performance over 200-240 GHz has been measured and the

bbBNN device is shown to provide as much as 734 microwatts output power. This is believed to be the highest conversion efficiency yet reported for all planar tripler at this frequency. The performance is expected to be improved further with minor changes to the device and circuit parameters.

I. INTRODUCTION

The submillimeter-wave range of the spectrum holds enormous promise for spectral line studies of the interstellar medium, distant galaxies, solar system and earth remote sensing. To achieve the high sensitivity and spectral resolution requirements of observatory and exploratory stage missions, submillimeter-wave heterodyne radiometers are being developed [1,2]. One of the least developed technologies for submillimeter-wave heterodyne radiometry is the local oscillator source. Candidate technologies include harmonic generators, such as frequency multipliers pumped by millimeter-wave fundamental sources. Although the whisker contacted Schottky varactor diodes have proven very effective, there remains great interest in developing mechanically robust, planar device technologies which are capable of operating well into the submillimeter wavelength range and have the potential to deliver sufficient amounts of power [3]. To minimize the risk of failure, planar device technology is preferred for space applications. The goal of our work is to demonstrate that planar devices can replace whisker contacted devices without degrading performance.

One candidate planar diode is a planar back-to-back barrier-n-n^+ (bbBNN) varactor [4,5]. This device has a very sharp C-V characteristic, which helps the device to be highly efficient at low input power levels. This is an advantage, particularly at THz frequencies, where the available input power is quite low. Its symmetric C-V characteristic offers significant benefits for odd harmonic multiplier applications since the idler circuits at the even harmonics are not needed. This device has a comparatively low series resistance and high cut-off frequency. It has low

substrate parasitics as all non-essential semiconductor materials are removed using a backside processing technique [6]. Although measurements on discrete planar bbBNN devices have been carried out earlier in a crossed waveguide mount [5], handling and mounting of the small discrete chips were very difficult. This motivated us to develop the technique to integrate RF microstrip filter circuitry with the planar bbBNN device [7].

Waveguide mounts can provide appropriate embedding impedances at the input and output frequencies to couple power in and out of a nonlinear device. In order to accommodate the necessary waveguide flanges and backshort tuning mechanisms, frequency multipliers commonly utilize a crossed waveguide design. Ease of fabrication and assembly, wide tunability of fundamental and harmonic embedding impedances and low loss are the desirable aspects of the multifrequency, multiwaveguide mount designs. To avoid the fabrication complexity of the crossed waveguide block and to facilitate easy mounting of planar integrated devices, a split-waveguide block has been proposed recently [8]. The present experiment has been carried out using this split-waveguide block.

II INTEGRATED bbBNN DEVICE

The integrated bbBNN device used in this experiment was developed at the Microdevices Laboratory of JPL. Fig.1 shows the schematic diagram of an integrated planar bbBNN varactor structure on a quartz substrate. All non-essential high dielectric semiconductors have been removed using the backside processing technique, so as to have only the small semiconductor mesa region in the final circuit structure. The fabrication procedure for the integrated device has been described in [6,7]. The semiconductor layer structure of the mesa is shown in Fig.2. The thinned wafer from the top surface down consists of, (i) a 2 nm thick GaAs cap layer, (ii) a 20 nm $Al_{0.45}Ga_{0.55}As$ barrier, (ii) a 3 nm GaAs spacer followed by $4x10^{12}$ cm^{-2} silicon planar doping, (iv) a 120 nm thick moderately doped GaAs layer (doping level = $1x10^{17}$ cm^{-3}) and (v) a 1300

nm thick highly doped GaAs layer (doping level = $5x10^{18}$ cm^{-3}). The active mesa region is covered by a silicon nitride layer.

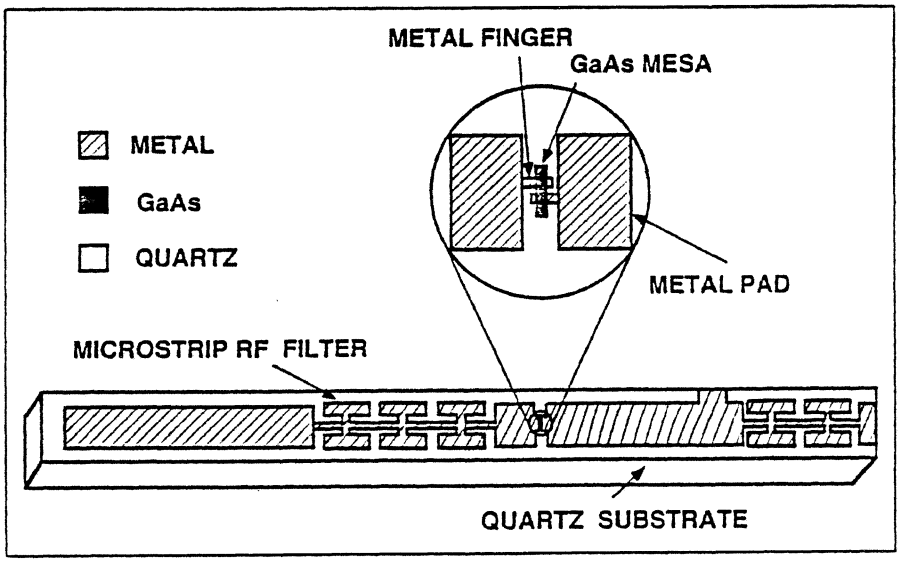

Fig.1 Schematic of a planar bbBNN varactor integrated with the microstrip filter structure on a fused quartz substrate

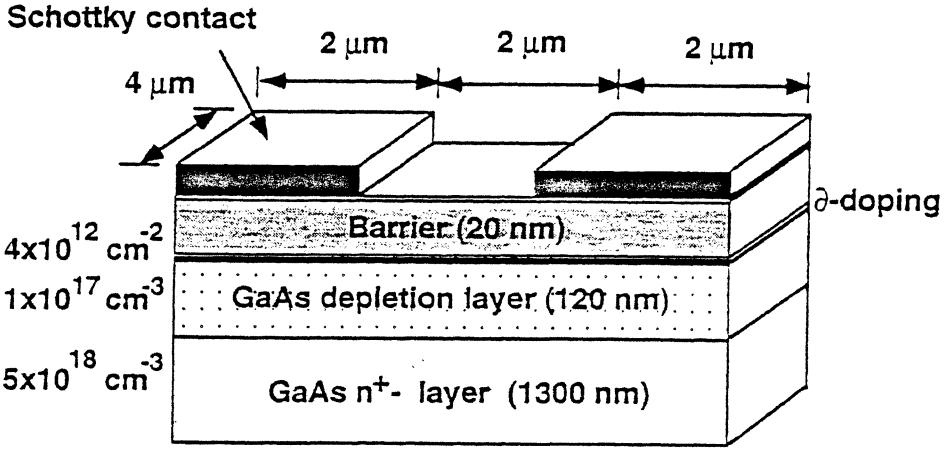

Fig.2 Semiconductor layer structure of the bbBNN device

Fig.3(a) and 3(b) show the capacitance-voltage (C-V) and current-voltage (I-V) characteristics of an 8 μm^2 device integrated with RF

microstrip filter circuitry. This device has $C_{max}/C_{min} = 2.7$ and a breakdown voltage of 6.5 volts.

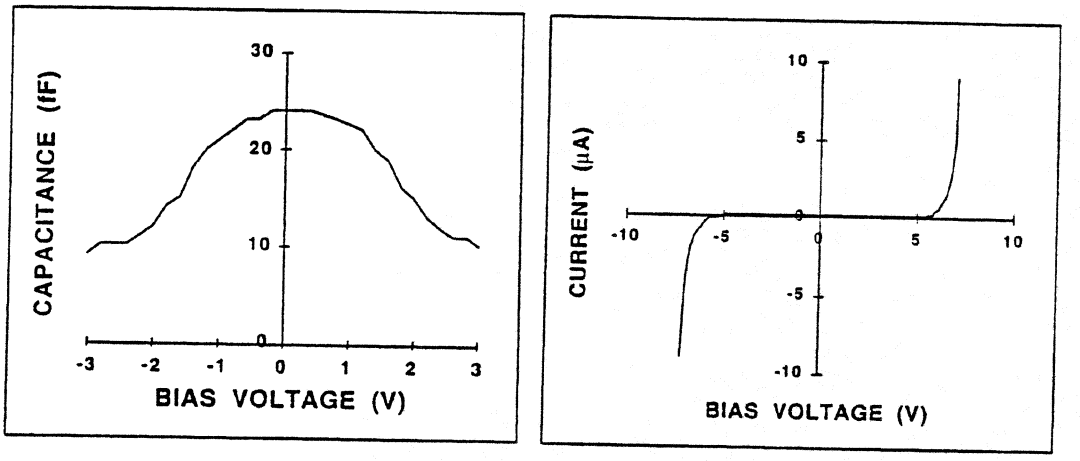

(a) (b)

Fig.3 Measured (a) C-V and (b) I-V characteristics of a 8 μm^2 integrated bbBNN varactor.

III. MOUNT DESCRIPTION

A split-waveguide mount [8] has been used to provide the proper embedding impedances to the integrated bbBNN device. This mount has been specially designed for planar devices integrated with filter tuning circuitry on a quartz substrate. Fig.4 shows one half of the 220 GHz tripler mount. Two halves of the block are mirror images of each other and input and output rectangular waveguides are split along the E-field. The input power is coupled to the quartz microstrip RF filter through a WR-12 E-plane arm. The bbBNN device is positioned at the center of the broadwall of a half height WR-4 waveguide (0.28 mm x 1.09 mm). A channel waveguide transformer [9] couples the output waveguide to standard WR-4 through an E-plane arm. The distances of the input and output E-plane waveguides from the microstrip filter are approximately $\lambda_{g,fundamental}/2$ and $\lambda_{g,third\text{-}harmonic}/2$ respectively. The mount has four sliding backshorts, two at the input side

and two at the output side. The backshorts provide both a series and parallel stub at the input and output and help to achieve the maximum coupling. The filter channel is 0.36 mm wide and 0.31 mm high and it extends across and beyond the output tuner waveguide. This allows DC and RF grounding at the end of a microstrip filter instead of at the waveguide wall. The bias voltage can be applied to the device through the bottom of the lower half of the block, via a SMA coaxial connector and a bias filter.

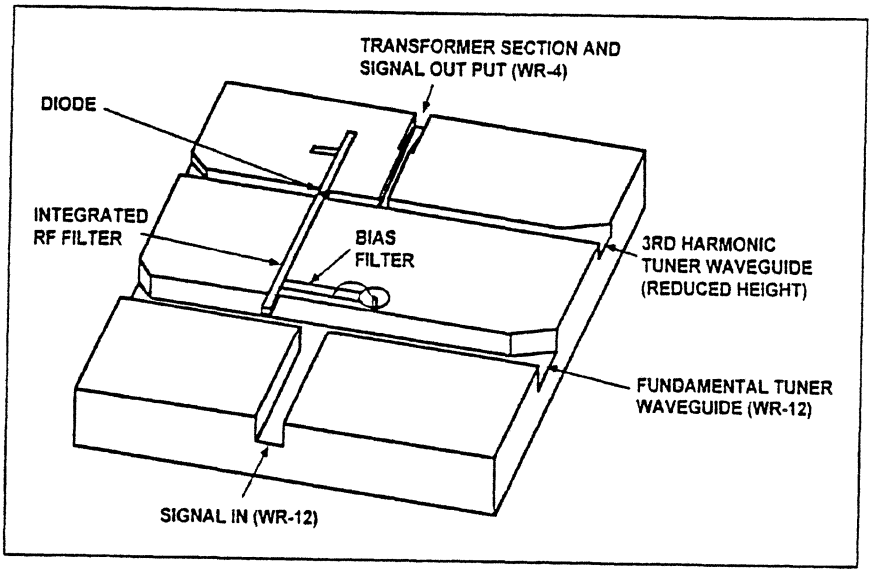

Fig.4 Schematic diagram of the lower half of the 220 GHz split-waveguide ripler mount with the integrated bbBNN device.

The integrated RF filter and the bias filter (Fig.4) help to achieve the signal separation. These microstrip hammerhead filters are fabricated on 0.33 mm wide and 0.152 mm thick fused quartz substrates. The bias filter and the RF filter are the three section hammerhead filters, similar to those presented in [10]. Fine tuning of the filter response was accomplished using the finite difference time domain (FDTD) method [11]. The bias filter rejects the input power 60-80 GHz. The RF filter passes the input frequency, but rejects the tripled output power. The filter on the far side of the output tuner waveguide presents a short circuit at the waveguide

wall at the third harmonic frequency and presents a reactive termination, via a side stub, at the fundamental frequency.

IV. RF PERFORMANCE

The tripler performance was measured using Gunn oscillators as pump source. Input frequencies in the range of 66-80 GHz were used. The device was biased at 0 volts during the measurements. The flange-to-flange efficiency of the bbBNN device with the C-V and I-V characteristics of Fig.3, was measured using the technique described in reference [12]. The best performance was achieved at an output frequency of 217.5 GHz. Fig.5(a) shows the measured flange-to-flange tripling efficiency versus input power for the integrated bbBNN in the 220 GHz split-waveguide mount. The flange-to-flange efficiency of the tripler reaches its maximum value of 7% at 8.8 mW input power and then begins to decrease as the pump power level is increased. Fig.5(b) shows the tripled output power versus input power for this device. A maximum output power of 734 μW was measured for 14.3 mW input power.

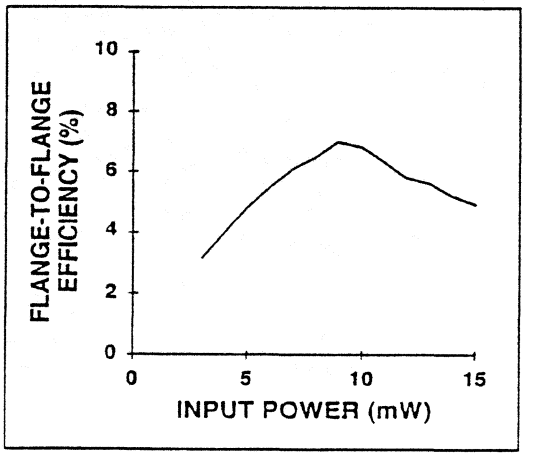

Fig.5(a) Measured flange-to-flange efficiency versus input power plot at 217.5 GHz.

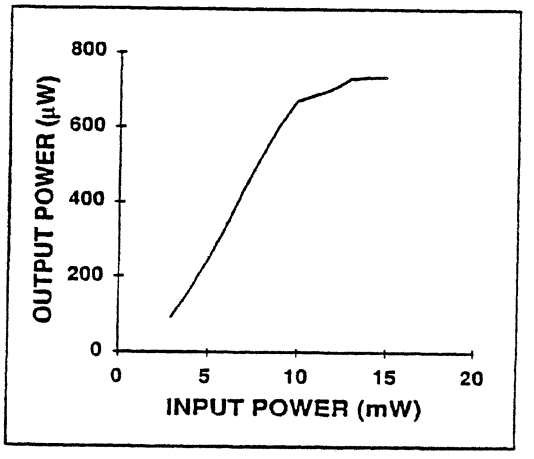

Fig.5(b) Measured output power versus input power plot at 217.5 GHz.

V. CONCLUSION

A flange-to-flange tripling efficiency of 7% has been reported for a planar bbBNN device integrated with microstrip tuning structures on a quartz substrate in 220 GHz split-waveguide mount. An output power of 734 μW has been measured. This is the best performance for these integrated devices to date. The measured device had C_{max}/C_{min} = 2.7. Theoretical studies indicate that devices with higher C_{max}/C_{min} will give better efficiency [13]. The performance should improve with minor modifications of device and circuit parameters.

ACKNOWLEDGMENT

The work was carried out at the Jet Propulsion Laboratory, California Institute of Technology, under contract with the National Aeronautics and Space Administration. The authors would like to

thank Dr. Margaret Frerking for various useful discussions. Authors also specially thank Andrew Pease and Mark Natzic for their help in mounting the integrated device structures in the split-waveguide mounts. A.V.Räisänen was on sabbatical leave at JPL as senior research Fellow of the National Research Council, from Helsinki University of Technology, Finland.

REFERENCES

[1] R.Zimmermann, R.Zimmermann, and P.Zimmermann, "All solid-state radiometers for environmental studies to 700 GHz", Proceedings of Third International Symposium on Space Terahertz Technology, pp.706-723, 1992.

[2] M.A.Frerking, "Submillimeter heterodyne instrument concept for SMIM", Proceedings of SPIE Conference, 1874, Infrared and Millimeter Wave Engineering (1993).

[3] B.J.Rizzi, K.K.Rausch, T.W.Crowe, P.J.Koh, W.C.B.Peatman, J.R.Jones, S.H.Jones and G.Tait, "Planar varactor diodes for submillimeter applications", Proceedings of Third International Symposium on Space Terahertz Technology, pp.297-311, 1992.

[4] U.Lieneweg, T.J.Tolmunen, M.A.Frerking and J.Maserjian, "Modeling of planar varactor frequency multiplier devices with blocking barriers", IEEE Trans. Microwave Theory and Tech., vol.40, no.5, pp.839-845, May 1992.

[5] D.Choudhury, A.V.Räisänen, R.P.Smith, M.A.Frerking, S.C.Martin and J.K.Liu, "Experimental performance of a back-to-back barrier-n-n^+ (bbBNN) varactor tripler at 200 GHz", IEEE Trans. Microwave Theory and Tech., vol.42, no.4, April 1994.

[6] R.P.Smith, D.Choudhury, S.C.Martin, M.A.Frerking, J.K.Liu and F.A.Grunthaner, "A new fabrication technique for back-to-back varactor diodes", Proceedings of Third International Symposium on Space Terahertz Technology, pp.158-163, 1992.

[7] D.Choudhury, A.V.Räisänen, R.P.Smith, S.C.Martin, J.E.Oswald, R.J.Dengler, M.A.Frerking and P.H.Siegel, "Frequency tripler with integrated back-to-back barrier-n-n^+ (bbBNN) varactor diodes in a novel split-waveguide block at 220 GHz", 1994 IEEE MTT-S Symposium Digest, San Diego, May 1994.

[8] A.V.Räisänen, D.Choudhury, R.J.Dengler, J.E.Oswald and P.H.Siegel, "A novel split-waveguide mount design for millimeter- and submillimeter-wave frequency multipliers and harmonic mixers", IEEE Microwave and Guided Wave Letters, vol.3, no.10, pp.369-371, October 1993.

[9] P.H.Siegel, D.W.Peterson and A.R.Kerr, "Design and analysis of channel waveguide transformer", IEEE Trans. Microwave Theory and Tech., vol.31, no.6, pp.473-484, June 1983.

[10] P.H.Siegel, J.E.Oswald, R.J.Dengler, D.M.Sheen and S.M.Ali, "Measured and computed performance of a microstrip filter composed of semi-insulating GaAS on a fused quartz substrate", IEEE Microwave and Guided Wave Letters, vol.1, no.4, pp.78-80, April 1991.

[11] J.E.Oswald and P.H.Siegel, "The application of the FDTD method to millimeter-wave filter circuits including the design and analysis of a compact coplanar strip filter for THz frequencies", 1994 IEEE MTT-S Symposium Digest, San Diego, May 1994.

[12] D.Choudhury, M.A.Frerking and P.D.Batelaan, "A 200 GHz tripler using a single barrier varactor", IEEE Trans. Microwave Theory and Tech., vol.41, no.4, pp.595-599, April 1993.

[13] D.Choudhury, A.V.Räisänen, R.P.Smith and M.A.Frerking, "Study of the effect of the C_{max}/C_{min} ratio on the performance of back-to-back barrier-n-n^+ (bbBNN) varactors for frequency multiplier applications", IEEE Microwave and Guided Wave Letters, vol.4, no.4, April 1994.